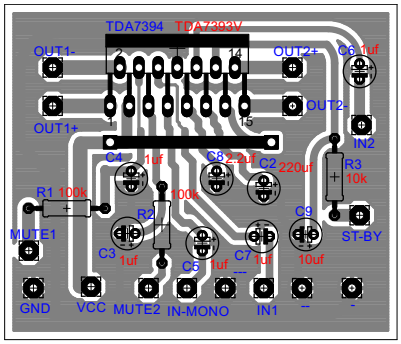
TDA7394
TDA7399V
OUT1-
OUT1+
OUT2+
OUT2-
C6 1uf
IN2
R3
10k
C4
1uf
C8 2.2uf
C2 220uf
R1 100k
R2
100k
C9
MUTE1
ST-BY
C3
1uf
C5
1uf
C7 1uf
10uf
GND
VCC
MUTE2
IN-MONO
IN1
--
-