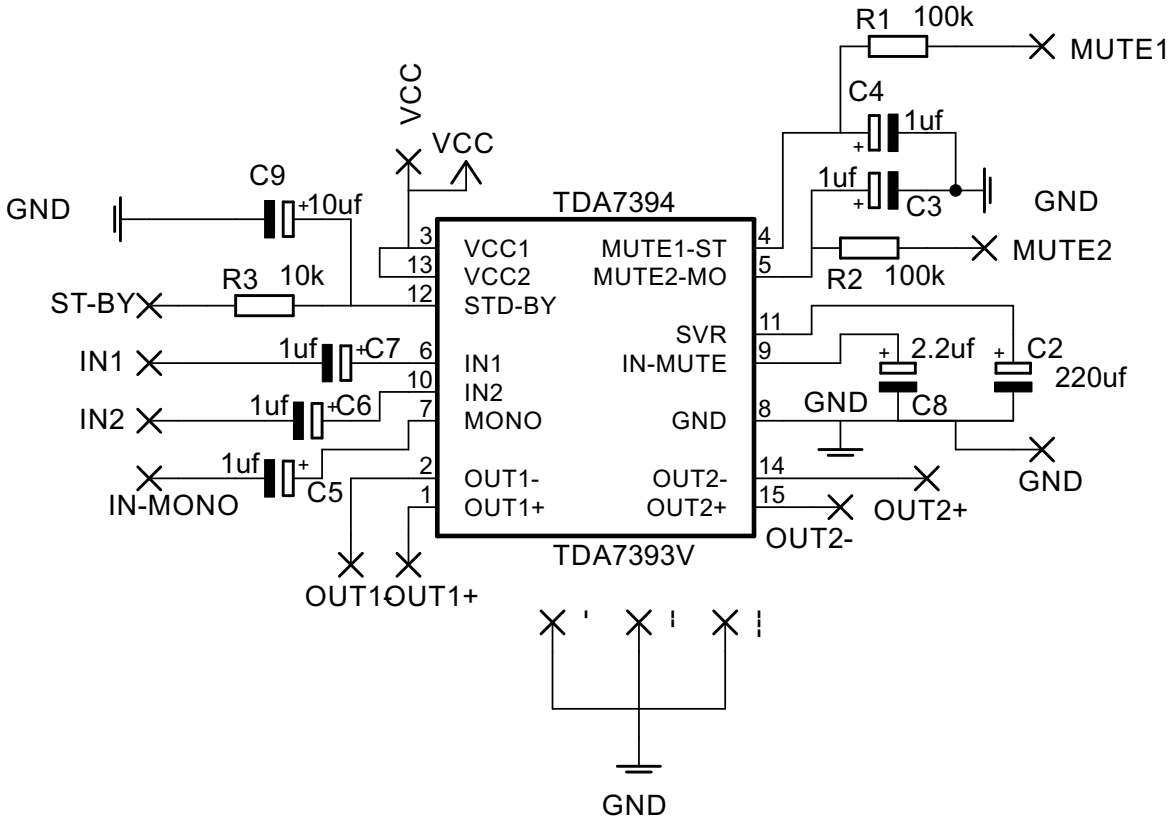
R1 100k
MUTE1
C4
1uf
1uf
C3
GND
MUTE2
R2 100k
VCC
VCC
C9
GND
10uf
TDA7394
3
13
12
VCC1
VCC2
STD-BY
MUTE1-ST
MUTE2-MO
4
5
R3 10k
ST-BY
11
9
SVR
IN-MUTE
2.2uf
C2
220uf
IN1
1uf
C7
6
10
IN1
IN2
MONO
IN2
1uf
C6
7
GND
C8
8
GND
GND
IN-MONO
1uf
C5
2
1
OUT1-
OUT1+
OUT2-
OUT2+
14
15
OUT2+
OUT2-
TDA7393V
OUT1-
OUT1+
GND